REV	ECN #	DESCRIPTION	DRAWING	APPROVED	DATE
A		NEW RELEASE	DEYI		2012/9/10

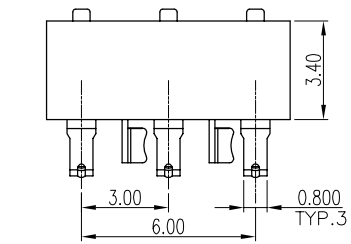

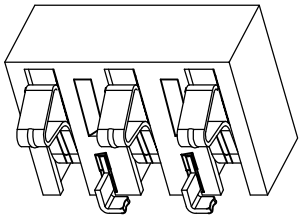

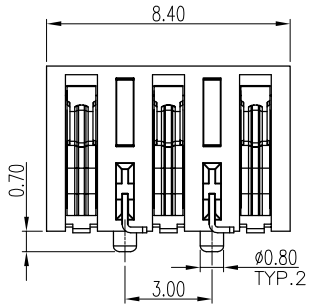

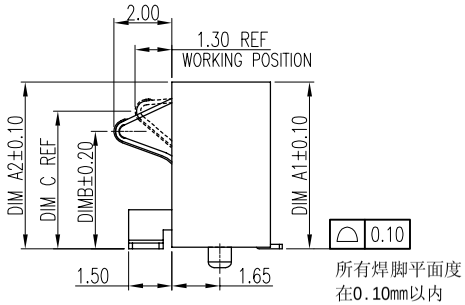

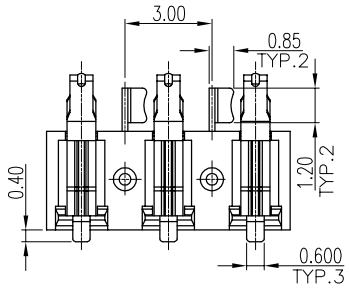

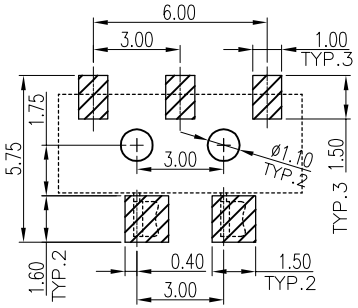

RECOMMENDED PCB LAYOUT
TOLERANCE:±0.05

NOTES:

1. MATERIAL:
   1.1 HOUSING:THERMOPLASTIC FLAMMABILITY RATING UL94V-0
   1.2 CONTACT:COPPERY ALLOY T=0.15mm
   1.3 PEG: COPPER ALLOY T=0.20mm
2. FINISH:
   2.1 CONTACT:
   3u" MIN GOLD PLATED ON CONTACT AREA
   G/F PLATING ON SOLDER TAIL AREA
   50~80u"NICKEL UNDERPLATING OVERALL
   2.2 PEG :
   80~120u"MATTE TIN PLATING ALL
   50~80u"NICKEL UNDERPLATING OVERALL
3. SPECIFICATION:
   3.1 CURRENT RATING: 2.0 A MAX
   3.2 VOLTAGE: 250 VAC
   3.3 TEMPERATURE RANGE: -55 °C ~ 85 °C
   3.4 CONTACT RESISTANCE: 50 MILLIONHM MAX
   3.5 DIELECTRIC WITHSTANDING VOLTAGE: 350 VAC r.m.s
   3.6 INSULATION RESISTNACE: 500 MEGOHMS MIN

PRODUCT NO.

BT23-03 A B 05-XX
① ② ③ ④

PRODUCT SERIES:

① BT23:3PIN 电池连接器 3.0PITCH 5.4~6.2H

② PIN NO.:
03: 3PIN

③ MATERIAL:
A: LCP

④ SERIES NO.:
XX:SEE TABLE A

TABLE A:

TYPE	DIM A	DIM B	P/N(有定位柱)	P/N(无定位柱)
5.4H	5.40	3.70	BT23-03AB05-00	BT23-03AB05-01
6.0H	6.00	4.30	BT23-03AB05-04	BT23-03AB05-05
6.2H	6.20	4.50	BT23-03AB05-06	BT23-03AB05-07
6.5H	6.50	4.80	BT23-03AB05-09	BT23-03AB05-10

CUSTOMER DRAWING

GENERAL TOLERANCE
X.
.X ±0.20
.XX ±0.15
.XXX ±0.10

ANGEL TOLERANCE
X. ±3°
.XX ±2°
.XXX ±1°

YTCONN Dongguan YTCONN Electronics Technology Co., Ltd.

DRAWING	DEYI	TITLE:	3PIN BATTERY CONNECTORT 5.4~6.2H 3.0PITCH
APPROVED		P/N:	BT23-03AB05-XX
DATE	2012.09.10	DRAWING NO.	C-BT23-00

UNIT mm | SCALE 1:1 | SIZE A4 | SHEET 1of1 | REV A