REV	ECN #	DESCRIPTION	DRAWING	APPROVED	DATE
A		NEW RELEASE	DEYI		2012/9/10

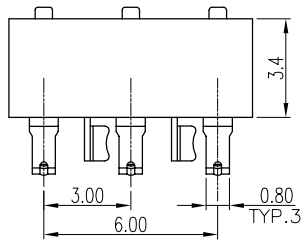

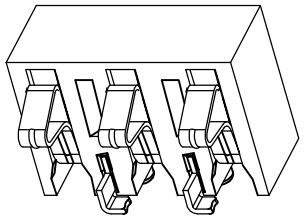

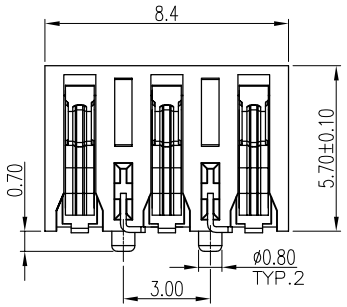

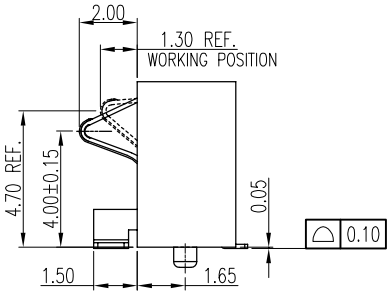

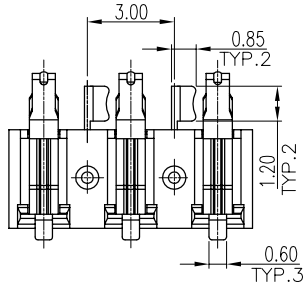

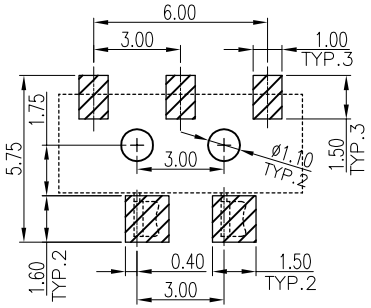

RECOMMENDED PCB LAYOUT
TOLERANCE:±0.05

NOTES:

1. MATERIAL:
   1.1 HOUSING:THERMOPLASTIC FLAMMABILITY RATING UL94V-0
   1.2 CONTACT:COPPERY ALLOY T=0.15mm
   1.3 PEG: COPPER ALLOY T=0.20mm
2. FINISH:
   2.1 CONTACT:
   3u" MIN GOLD PLATED ON CONTACT AREA
   G/F PLATING ON SOLDER TAIL AREA
   50~80u"NICKEL UNDERPLATING OVERALL
   2.2 PEG :
   80~120u"MATTE TIN PLATING ALL
   50~80u"NICKEL UNDERPLATING OVERALL
3. SPECIFICATION:
   3.1 CURRENT RATING: 2.0 A MAX
   3.2 VOLTAGE: 250 VAC
   3.3 TEMPERATURE RANGE: -55 °C ~ 85 °C
   3.4 CONTACT RESISTANCE: 50 MILLIONHM MAX
   3.5 DIELECTRIC WITHSTANDING VOLTAGE: 350 VAC r.m.s
   3.6 INSULATION RESISTNACE: 500 MEGOHMS MIN

PRODUCT NO.

BT23-03 A B 05-02
① ② ③ ④

PRODUCT SERIES:

① BT23:3PIN 电池连接器 3.0PITCH

② PIN NO.:
03: 3PIN

③ MATERIAL:
A: LCP

④ SERIES NO.:
02:5.7H 有柱

CUSTOMER DRAWING	YTCONN Dongguan YTCONN Electronics Technology Co., Ltd.		
GENERAL TOLERANCE X. .X ±0.20 .XX ±0.15 .XXX ±0.10	DRAWING: DEYI	TITLE: 3PIN BATTERY CONNECTORT 5.4~6.2H 3.0PITCH	
	APPROVED:	P/N: BT23-03AB05-02	
ANGEL TOLERANCE X. ±3° .XX ±2° .XXX ±1°	DATE: 2012.09.10	DRAWING NO. C-BT23-02	
	UNIT mm	SCALE 1:1	SIZE A4	SHEET 1of1	REV A